AQA

Please write clearly in block capitals.

Centre number | | | | | | Candidate number | | | | |

Surname _____

Forename(s) _____

Candidate signature _____

YORKSHIRE MATHS TUTOR

GCSE MATHEMATICS

H

Higher Tier Paper 1 Non-Calculator

Tuesday 5 November 2019 Morning Time allowed: 1 hour 30 minutes

Materials

For this paper you must have:
- mathematical instruments

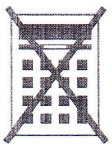

You must **not** use a calculator.

Instructions

- Use black ink or black ball-point pen. Draw diagrams in pencil.
- Fill in the boxes at the top of this page.
- Answer **all** questions.
- You must answer the questions in the spaces provided. Do not write outside the box around each page or on blank pages.
- Do all rough work in this book. Cross through any work you do not want to be marked.

Information

- The marks for questions are shown in brackets.
- The maximum mark for this paper is 80.
- You may ask for more answer paper, graph paper and tracing paper. These must be tagged securely to this answer book.

Advice

In all calculations, show clearly how you work out your answer.

For Examiner's Use	
Pages	Mark
2–3	
4–5	
6–7	
8–9	
10–11	
12–13	
14–15	
16–17	
18–19	
20–21	
22–23	
24–25	
26	
TOTAL	

N O V 1 9 8 3 0 0 1 H 0 1

IB/M/Nov19/E8

8300/1H

Answer **all** questions in the spaces provided

Do not write outside the box

100% - 15% = 85%
= 0.85

1 Circle the calculation that decreases 250 by 15%

[1 mark]

250 ÷ 1.15 | 250 × 0.15 | 250 × 0.85 | 250 ÷ 0.85

2 Solve $3x = 2x$

Circle your answer.

[1 mark]

$x = -1$ | $x = 0$ | $x = \frac{2}{3}$ | $x = \frac{3}{2}$

Do not write outside the box

3 *A* is (2, 13) and *B* is (10, 1)

Circle the midpoint of *AB*.

$\left(\frac{2+10}{2}, \frac{13+1}{2}\right)$

$= (6, 7)$

[1 mark]

(4, 6) (5, 6.5) (6, 7) (8, 12)

4 Circle the expression equivalent to $(2x)^4$

$= 16x^4$

[1 mark]

$2x^4$ $6x^4$ $8x^4$ $16x^4$

Turn over for the next question

4

Do not write outside the box

5 (a) Here are two triangles, P and Q.

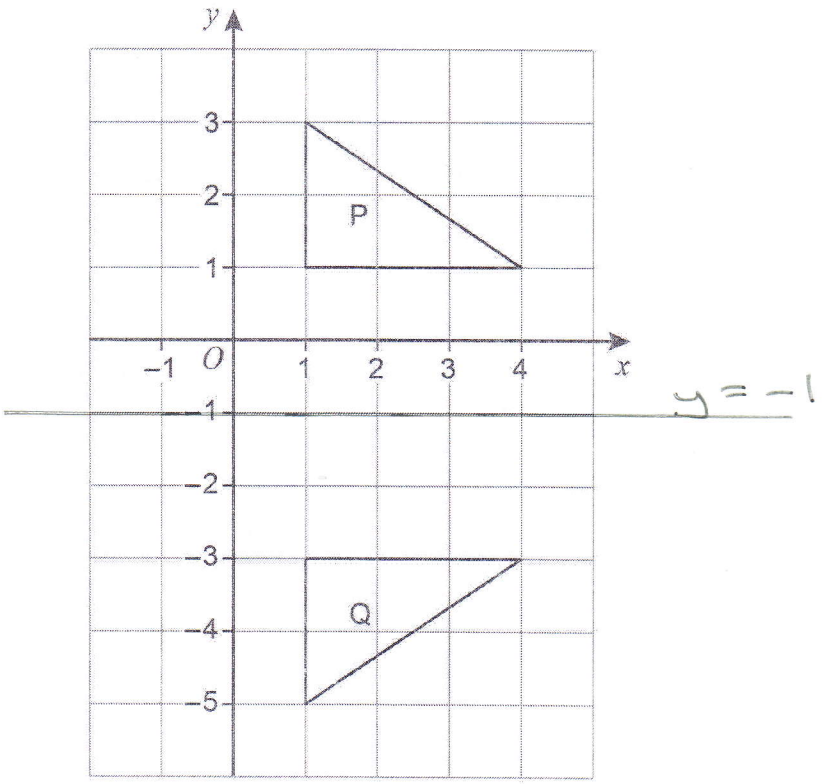

Here is a statement.

> A transformation that maps P to Q is a reflection in the line $x = -1$

Make **one** criticism of the statement.

[1 mark]

Should be reflection in line y = −1

Do not write outside the box

5 (b) Here are two shapes, C and D.

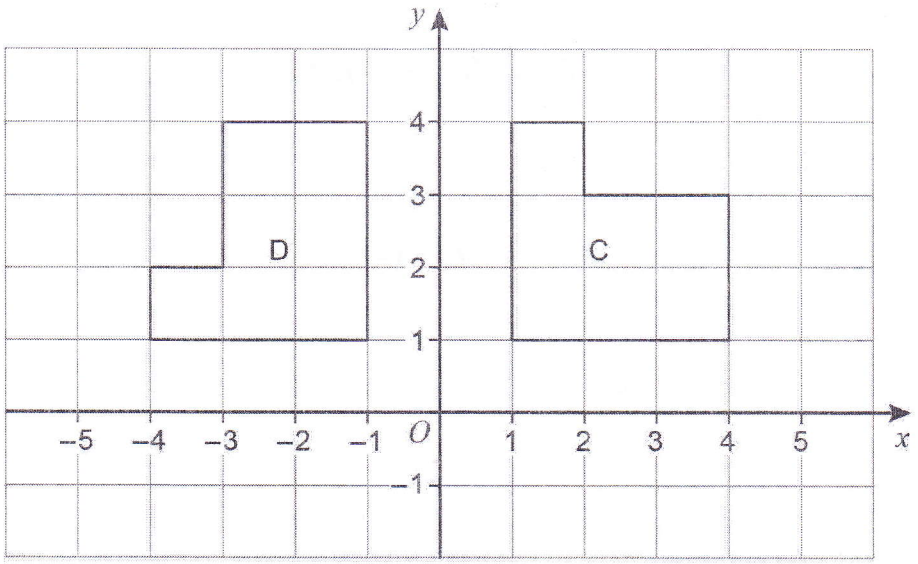

Here is a statement.

> A transformation that maps C to D is a rotation through 90° anticlockwise.

Make **one** criticism of the statement.

[1 mark]

Should say that the centre of rotation is (0,0)

Turn over for the next question

2

Do not write outside the box

6 (a) A geometric progression starts 4 16

Work out the next term. ×4

[1 mark]

16 × 4 = 64

Answer 64

6 (b) A Fibonacci-type sequence starts 3 –8

The sequence is continued by adding the previous two terms.

Work out the next **two** terms.

[2 marks]

3 − 8 = −5

−8 − 5 = −13

Answer −5 and −13

Do not write outside the box

7 Given that $a \times 60 = b$ work out the value of $\frac{4b}{a}$

[2 marks]

$60 = \frac{b}{a}$ $\therefore$ 4×60

$= 240$

Answer 240

8 Write $27 \times \left(3^2\right)^7$ as a single power of 3

[3 marks]

$3^3 \times 3^{14} = 3^{17}$

Answer 3^{17}

Turn over for the next question

8

Do not write outside the box

9 Here are two solids.

Cylinder

radius 4 cm height 10 cm

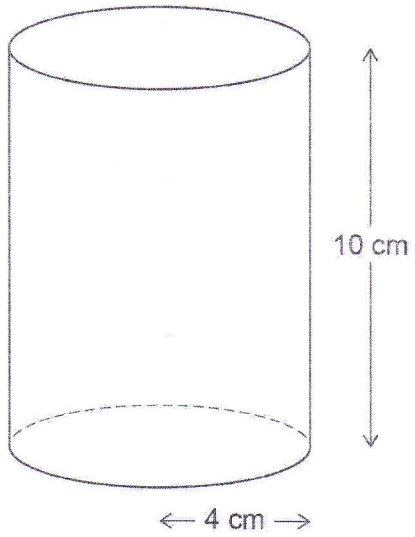

Hemisphere

radius 6 cm

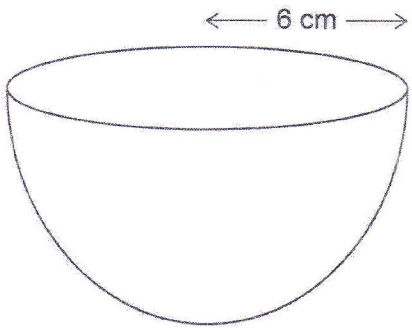

volume of a hemisphere = $\frac{2}{3}\pi r^3$ where r is the radius

Do not write outside the box

Which solid has the greater volume?

You **must** show your working.

[4 marks]

Cylinder = $\pi \times 4^2 \times 10 = 160\pi \text{ cm}^3$

Hemisphere = $\frac{1}{2} \times \frac{4}{3} \times \pi \times 6^3$

$= \frac{2}{3} \times 216\pi$

$= 72 \times 2\pi$

$= 144\pi \text{ cm}^3$

3
36
6x
216

072
3|216

Answer Cylinder

Turn over for the next question

4

Do not write outside the box

10 Saj makes Rose Pink paint and Cherry Pink paint.

He mixes red paint with white paint as shown.

Rose Pink	**Cherry Pink**
red : white = 1 : 2	red : white = 4 : 3

He makes 60 litres of Rose Pink paint.

To this Rose Pink paint he adds

80 litres of red paint and 28 litres of white paint.

Has he now made Cherry Pink paint?

You **must** show your working.

[4 marks]

Rose Pink

R : W 60L 60 ÷ 3 = 20

1 : 2

20 : 40

↓ ↓

+ 80 28

100 : 68

50 : 34

25 : 17 as this ratio is not 4 : 3 it is not Cherry Pink

Do not write outside the box

11 (a) Work out $\dfrac{2 \times 10^{14}}{8 \times 10^{9}}$

$2 \div 8 = \frac{1}{4} = 0.25$

$10^{14} \div 10^{9} = 10^{5}$

Give your answer in standard form.

[2 marks]

0.25×10^{5}

$\times 10 \quad \div 10$

2.5×10^{4}

Answer 2.5×10^{4}

11 (b) $6200.07 = 6.2 \times 10^{c} + 7 \times 10^{d}$

Work out the values of c and d.

[2 marks]

$6200 = 6.2 \times 10^{3}$

$0.07 = 7 \times 10^{-2}$

$c =$ 3 $\quad d =$ -2

Turn over for the next question

8

Do not write outside the box

12 $V = \frac{k}{H}$ where k is a constant.

Which **two** statements are correct?

Tick **two** boxes.

[1 mark]

- [ ] V is directly proportional to H
- [x] V is inversely proportional to H
- [x] V is directly proportional to $\frac{1}{H}$
- [ ] V is inversely proportional to $\frac{1}{H}$

Do not write outside the box

13 The nth term of a sequence is $\dfrac{n(n-4)}{\sqrt{n+3}}$

Work out the sum of the 1st and 6th terms.

[3 marks]

$n = 1 \quad \dfrac{1(1-4)}{\sqrt{1+3}} = \dfrac{-3}{2} = -1.5$

$n = 6 \quad \dfrac{6(6-4)}{\sqrt{6+3}} = \dfrac{12}{3} = 4$

$4 - 1.5 = 2.5$

Answer 2.5

14 $8300 = 100 \times 83$

$\sqrt{100} = 10$

$\sqrt{83} \approx 9$

$10 \times 9 = 90$

Circle the number that is closest in value to $\sqrt{8300}$

[1 mark]

19 (90) 830 900

5

Do not write outside the box

15 Here is a **sketch** of a quadrilateral.

All lengths are in centimetres.

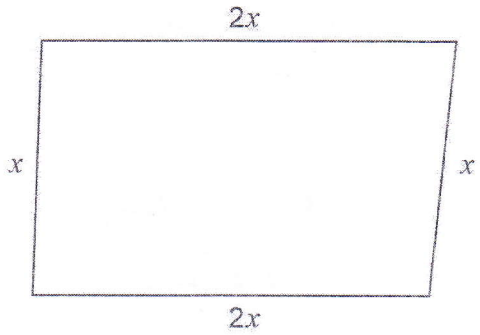

Not drawn accurately

Tick **one** box for each statement.

[3 marks]

	True	May be true	Not true
The quadrilateral is a rectangle		✓	
The quadrilateral is a parallelogram	✓		
The quadrilateral is a rhombus			✓
The quadrilateral is a kite			✓

Do not write outside the box

16 In a box there are some buttons.

45 are large and the rest are small.

Some are yellow and the rest are green.

The number of small is $\frac{5}{3}$ of the number of large.

The number of green is 300% of the number of yellow. $\times 3$

There are 12 small yellow buttons.

How many large green buttons are there?

You may use the two-way table to help you.

[4 marks]

	Large	Small	
Yellow	x	12	
Green	$45-x$	63	
	45	75	

$\frac{5}{3} \times \frac{15}{1} = 75$ small

$75 - 12 = 63$

↓ green ↓ yellow

$(45-x)+63 = 3x(12+x)$

$45 + 63 - x = 36 + 3x$

$108 - 36 = 4x$

Answer 27 Large green

$72 = 4x$

$x = 18$

Large green $= 45 - 18 = 27$

7

Do not write outside the box

17 $\mathbf{a} = \begin{pmatrix} -3 \\ 2 \end{pmatrix}$ and $\mathbf{b} = \begin{pmatrix} 1 \\ -5 \end{pmatrix}$

Work out $\mathbf{a} - 3\mathbf{b}$

Circle your answer.

$\begin{pmatrix} -3 \\ 2 \end{pmatrix} - 3\begin{pmatrix} 1 \\ -5 \end{pmatrix} = \begin{pmatrix} -3-3 \\ 2+15 \end{pmatrix} = \begin{pmatrix} -6 \\ 17 \end{pmatrix}$

[1 mark]

$\begin{pmatrix} -6 \\ 17 \end{pmatrix}$ $\begin{pmatrix} -6 \\ -13 \end{pmatrix}$ $\begin{pmatrix} 0 \\ 17 \end{pmatrix}$ $\begin{pmatrix} 0 \\ -13 \end{pmatrix}$

18 Solve $\frac{x+15}{3} = 2(x+10)$

[4 marks]

$x + 15 = 6(x + 10)$

$x + 15 = 6x + 60$

$15 - 60 = 6x - x$

$-45 = 5x$

$x = -9$

$x =$ -9

Do not write outside the box

19 The box plots represent the distances run by the players in a football match.

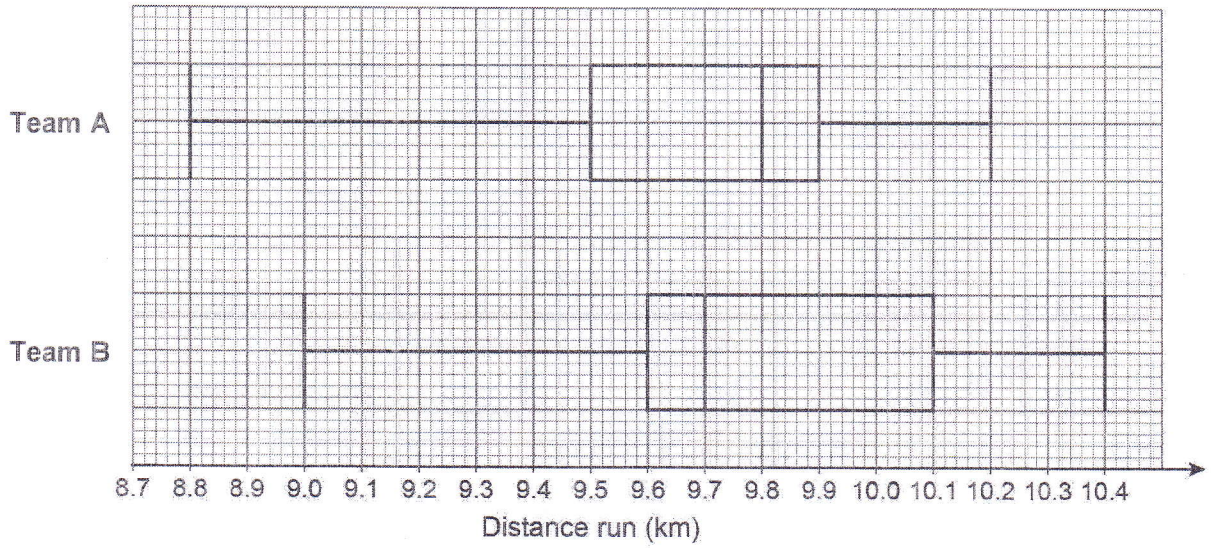

19 (a) On average, which team's players ran further?

Tick a box.

☑ Team A ☐ Team B

Give a reason for your answer.

[1 mark]

The median for Team A is higher

19 (b) The players in Team A ran more consistent distances.

How do the box plots show this?

[1 mark]

IQR for A = 9.9 − 9.5 = 0.4

IQR for B = 10.1 − 9.6 = 0.5

Therefor Team A is more consistent as IQR smaller

7

Turn over ▶

Do not write outside the box

20 The Venn diagram shows information about some houses.

G = houses with a garage

S = houses with a shed

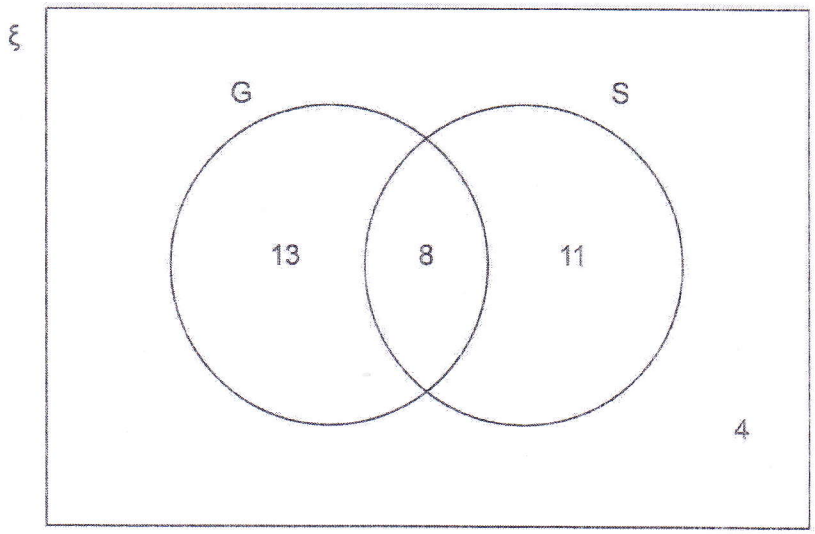

A house is chosen at random.

20 (a) The house has a garage.

What is the probability that it has a shed?

[1 mark]

Answer $\frac{8}{21}$

20 (b) The house does **not** have a garage.

What is the probability that it does **not** have a shed?

[1 mark]

Answer $\frac{4}{15}$

Do not write outside the box

20 (c) Show that $P(G \cap S)' > P(G \cup S')$

[2 marks]

$P(G \cap S) = \frac{8}{36}$ so $P(G \cap S)' = \frac{28}{36}$

$P(G \cup S') = \frac{25}{36}$

$\therefore P(G \cap S)' > P(G \cup S')$

21 Work out $0.70\dot{4}\dot{8} - 0.001$

Circle your answer.

[1 mark]

$0.70\dot{3}\dot{8}$ $0.703\dot{8}$ $0.703\dot{8}\dot{3}$ $0.703\dot{8}\dot{4}$

$$\begin{array}{r} 0.70484848 \\ 0.00100000 - \\ \hline 0.70384848 \end{array}$$

$= 0.70\dot{3}8\dot{4}$

Turn over for the next question

5

Do not write outside the box

22 (–3, 10) is a point on line L.

(4, 0) and (6, 10) are points on line M.

L and M are parallel.

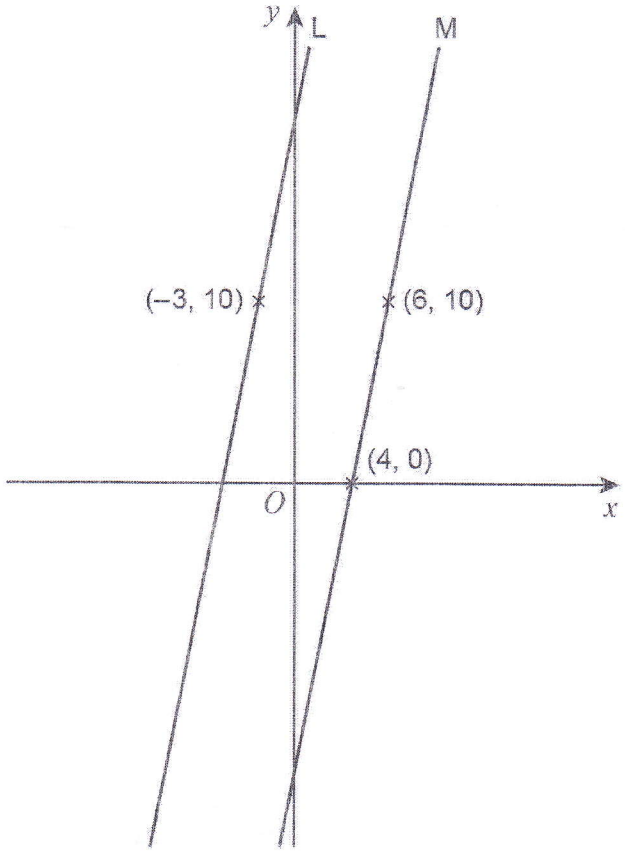

Not drawn accurately

Work out the equation of line L.

Give your answer in the form $y = mx + c$

[3 marks]

Gradient of M = $\frac{10-0}{6-4} = \frac{10}{2} = 5$

Equation of L $m = 5$ $(-3, 10)$

$y = mx + c$

$10 = 5 \times -3 + c$

$10 + 15 = c$

Answer $y = 5x + 25$

Do not write outside the box

23 (a) Factorise $5x^2 + 6x - 8$

[2 marks]

$(5x-4)(x+2)$

Answer $(5x-4)(x+2)$

23 (b) Simplify fully $\dfrac{x^2+9x+14}{x^2-4}$

[3 marks]

$$\frac{(x+7)(x+2)}{(x-2)(x+2)}$$

Answer $\dfrac{x+7}{x-2}$

Turn over for the next question

8

Do not write outside the box

24 Work out $\sqrt{18} - \frac{28}{\sqrt{50}}$

Give your answer in the form $\frac{\sqrt{a}}{b}$ where a and b are integers.

[4 marks]

$\frac{\sqrt{18}}{1} - \frac{28}{\sqrt{50}}$

$\frac{\sqrt{50}\sqrt{18} - 28}{\sqrt{50}} = \frac{\sqrt{2}\sqrt{25} \times \sqrt{9} \times \sqrt{2} - 28}{\sqrt{2} \times \sqrt{25}}$

$= \frac{2 \times 5 \times 3 - 28}{5\sqrt{2}} = \frac{2}{5\sqrt{2}}$

$\times$ by $\frac{\sqrt{2}}{\sqrt{2}}$

$\frac{2}{5\sqrt{2}} \times \frac{\sqrt{2}}{\sqrt{2}} = \frac{2\sqrt{2}}{10} = \frac{\sqrt{2}}{5}$

where $a = 2$, $b = 5$

Answer $\frac{\sqrt{2}}{5}$

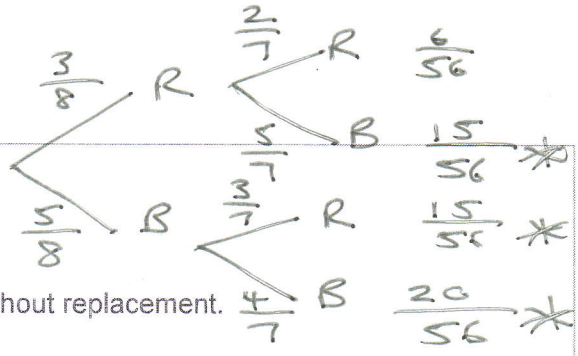

Do not write outside the box

part (b)

25 A bag contains 8 balls.

3 are red and 5 are blue.

2 balls are taken from the bag at random without replacement.

25 (a) Write down the probability that there is **at least** 1 red ball still in the bag.

[1 mark]

Answer 1

25 (b) Work out the probability that there are **at least** 2 red balls still in the bag.

[3 marks]

This means either one red or no reds picked

$= \frac{15}{56} + \frac{15}{56} + \frac{20}{56} = \frac{50}{56}$

Answer $\frac{50}{56}$

8

Do not write outside the box

26 Here are a circle and a sector of the circle.

They each have radius r.

Not drawn accurately

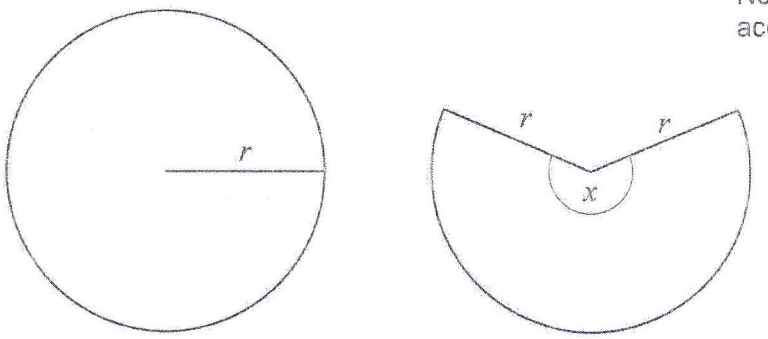

circumference of circle = perimeter of sector

Work out the size of angle x.

Give your answer in terms of π

[4 marks]

Circle Circumference = $\pi \times 2r$ (1)

Sector perimeter = $2r + \frac{x}{360} \times \pi \times 2r$ (2)

(1) = (2) gives

$2\pi r = 2\pi r \times \frac{x}{360} + 2r$

$2\pi r - 2r = \frac{2\pi r}{360} \times x$

$\frac{360}{2\pi r} \times 2r(\pi - 1) = x$

$\frac{360(\pi - 1)}{\pi} = x$

Answer $\frac{360(\pi - 1)}{\pi}$ degrees

Do not write outside the box

27 A curve has the equation $y = x^2 - 6x + 17$

The turning point of the curve is at $(a, 8)$

27 (a) By completing the square, or otherwise, work out the value of a.

[2 marks]

$(x-3)^2 - 3^2 + 17$

$(x-3)^2 - 9 + 17$

$(x-3)^2 + 8$

Answer $a = 3$

27 (b) The turning point of the curve $y = x^2 + 4x + b$ also has y-coordinate 8

Work out the value of b.

[2 marks]

$(x-2)^2 - 2^2 + b$

$(x-2)^2 - 4 + b$

$\therefore \quad -4 + b = 8$

$b = 12$

Answer $b = 12$

8

Do not write outside the box

28 Work out the value of $100^{-\frac{1}{2}}$

[2 marks]

$$\frac{1}{100^{\frac{1}{2}}} = \frac{1}{10}$$

Answer $\frac{1}{10}$

29 Show that the value of $5\sin 30° \times \cos 30° \times 8\tan 30°$ is an integer.

[4 marks]

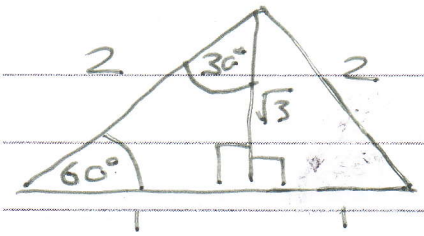

$\sin 30° = \frac{1}{2}$

$\cos 30° = \frac{\sqrt{3}}{2}$

$\tan 30° = \frac{1}{\sqrt{3}}$

$5\sin 30° \times \cos 30° \times 8\tan 30°$

$= \frac{5}{1} \times \frac{1}{2} \times \frac{\sqrt{3}}{2} \times \frac{8}{1} \times \frac{1}{\sqrt{3}}$

$= \frac{40}{4} = 10$

END OF QUESTIONS

6