JAN 2007

1. $$f(x) = x^3 + 3x^2 + 5.$$

Find

(a) $f''(x)$, **(3)**

(b) $\int_1^2 f(x)\,dx$. **(4)**

JAN 2007

Leave blank

8. A diesel lorry is driven from Birmingham to Bury at a steady speed of v kilometres per hour. The total cost of the journey, £C, is given by

$$C = \frac{1400}{v} + \frac{2v}{7}.$$

(a) Find the value of v for which C is a minimum.

(5)

(b) Find $\frac{d^2C}{dv^2}$ and hence verify that C is a minimum for this value of v.

(2)

(c) Calculate the minimum total cost of the journey.

(2)

N 2 4 3 2 2 A 0 1 6 2 4

JAN 2008

Leave blank

9. **Figure 4**

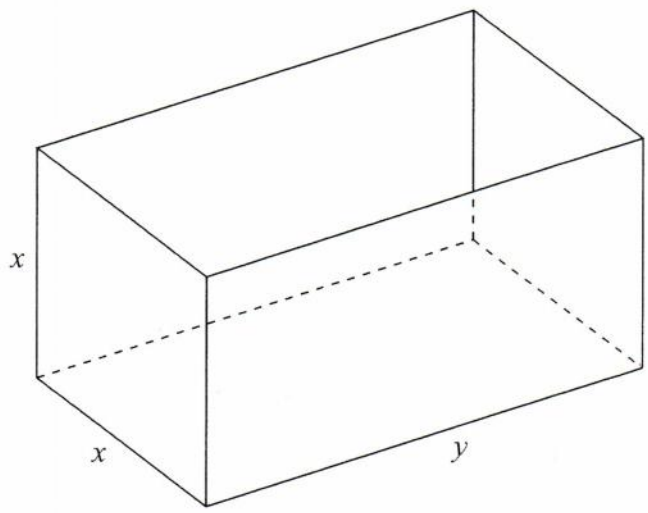

Figure 4 shows an open-topped water tank, in the shape of a cuboid, which is made of sheet metal. The base of the tank is a rectangle x metres by y metres. The height of the tank is x metres.

The capacity of the tank is $100\ \text{m}^3$.

(a) Show that the area $A\ \text{m}^2$ of the sheet metal used to make the tank is given by

$$A = \frac{300}{x} + 2x^2.$$

(4)

(b) Use calculus to find the value of x for which A is stationary.

(4)

(c) Prove that this value of x gives a minimum value of A.

(2)

(d) Calculate the minimum area of sheet metal needed to make the tank.

(2)

H 2 6 3 2 0 A 0 2 2 2 4

JAN 2009

Leave blank

9.

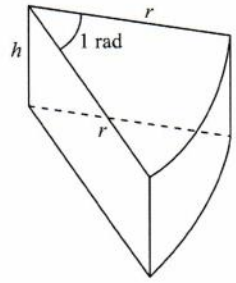

Figure 2

Figure 2 shows a closed box used by a shop for packing pieces of cake. The box is a right prism of height h cm. The cross section is a sector of a circle. The sector has radius r cm and angle 1 radian.

The volume of the box is 300 cm^3.

(a) Show that the surface area of the box, S cm^2, is given by

$$S = r^2 + \frac{1800}{r}$$

(5)

(b) Use calculus to find the value of r for which S is stationary.

(4)

(c) Prove that this value of r gives a minimum value of S.

(2)

(d) Find, to the nearest cm^2, this minimum value of S.

(2)

H 3 4 2 6 3 A 0 2 2 2 4

JAN 2009

Leave blank

10. A solid right circular cylinder has radius r cm and height h cm.

The total surface area of the cylinder is 800 cm^2 .

(a) Show that the volume, V cm^3 , of the cylinder is given by

$$V = 400r - \pi r^3.$$

(4)

Given that r varies,

(b) use calculus to find the maximum value of V, to the nearest cm^3.

(6)

(c) Justify that the value of V you have found is a maximum.

(2)

H 3 0 9 5 7 A 0 2 6 2 8

JAN 2010

Leave blank

9. The curve C has equation $y = 12\sqrt{(x)} - x^{\frac{3}{2}} - 10, \quad x > 0$

(a) Use calculus to find the coordinates of the turning point on C.

(7)

(b) Find $\dfrac{d^2y}{dx^2}$.

(2)

(c) State the nature of the turning point.

(1)

C2 JAN 2011

Leave blank

10. The volume V cm^3 of a box, of height x cm, is given by

$$V = 4x(5-x)^2, \quad 0 < x < 5$$

(a) Find $\frac{dV}{dx}$.

(4)

(b) Hence find the maximum volume of the box.

(4)

(c) Use calculus to justify that the volume that you found in part (b) is a maximum.

(2)

C2 Jan 2012

Leave blank

8.

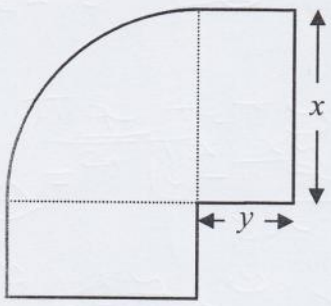

Figure 3

Figure 3 shows a flowerbed. Its shape is a quarter of a circle of radius x metres with two equal rectangles attached to it along its radii. Each rectangle has length equal to x metres and width equal to y metres.

Given that the area of the flowerbed is $4\ \text{m}^2$,

(a) show that

$$y = \frac{16 - \pi x^2}{8x}$$

(3)

(b) Hence show that the perimeter P metres of the flowerbed is given by the equation

$$P = \frac{8}{x} + 2x$$

(3)

(c) Use calculus to find the minimum value of P.

(5)

(d) Find the width of each rectangle when the perimeter is a minimum.
Give your answer to the nearest centimetre.

(2)

JUNE 2009

Leave blank

1. Use calculus to find the value of

$$\int_1^4 \left(2x + 3\sqrt{x}\right) \mathrm{d}x .$$

(5)

Q1

(Total 5 marks)

C2 June 2010

Leave blank

3.

$$y = x^2 - k\sqrt{x}, \quad \text{where } k \text{ is a constant.}$$

(a) Find $\frac{dy}{dx}$.

(2)

(b) Given that y is decreasing at $x = 4$, find the set of possible values of k.

(2)

MAY 2006

Leave blank

2. Use calculus to find the exact value of $\int_1^2 \left(3x^2 + 5 + \frac{4}{x^2}\right) dx$.

(5)

Q2

(Total 5 marks)

N 2 3 5 5 8 A 0 4 2 0

MAY 2007

Leave blank

1. Evaluate $\int_1^8 \frac{1}{\sqrt{x}}\,dx$, giving your answer in the form $a + b\sqrt{2}$, where a and b are integers.

(4)

Q1

(Total 4 marks)

H 2 6 1 0 8 A 0 2 2 4

MAY 2007

Leave blank

10.

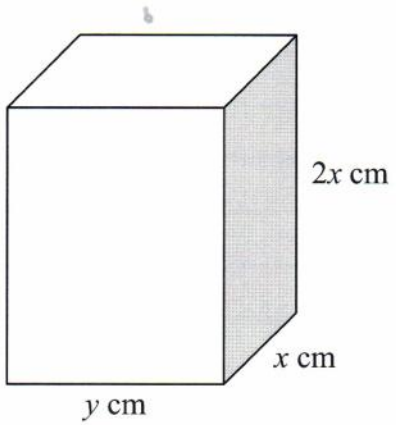

Figure 4

Figure 4 shows a solid brick in the shape of a cuboid measuring $2x$ cm by x cm by y cm.

The total surface area of the brick is 600 cm^2.

(a) Show that the volume, V cm^3, of the brick is given by

$$V = 200x - \frac{4x^3}{3}.$$

(4)

Given that x can vary,

(b) use calculus to find the maximum value of V, giving your answer to the nearest cm^3.

(5)

(c) Justify that the value of V you have found is a maximum.

(2)

H 2 6 1 0 8 A 0 2 2 2 4

Leave blank

8.

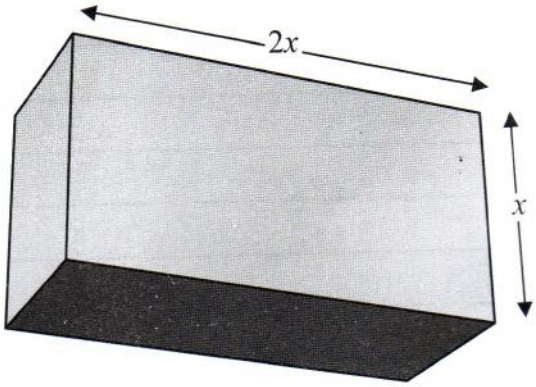

Figure 2

A cuboid has a rectangular cross-section where the length of the rectangle is equal to twice its width, x cm, as shown in Figure 2.
The volume of the cuboid is 81 cubic centimetres.

(a) Show that the total length, L cm, of the twelve edges of the cuboid is given by

$$L = 12x + \frac{162}{x^2}$$

(3)

(b) Use calculus to find the minimum value of L.

(6)

(c) Justify, by further differentiation, that the value of L that you have found is a minimum.

(2)

P 3 8 1 5 8 A 0 2 4 3 2

C2 May 2012

Leave blank

8.

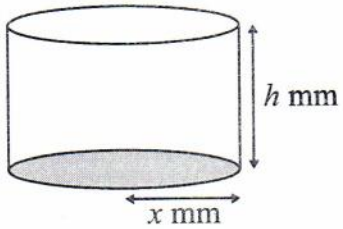

Figure 3

A manufacturer produces pain relieving tablets. Each tablet is in the shape of a solid circular cylinder with base radius x mm and height h mm, as shown in Figure 3.

Given that the volume of each tablet has to be 60 mm^3,

(a) express h in terms of x, **(1)**

(b) show that the surface area, A mm^2, of a tablet is given by $A = 2\pi x^2 + \dfrac{120}{x}$ **(3)**

The manufacturer needs to minimise the surface area A mm^2, of a tablet.

(c) Use calculus to find the value of x for which A is a minimum. **(5)**

(d) Calculate the minimum value of A, giving your answer to the nearest integer. **(2)**

(e) Show that this value of A is a minimum. **(2)**

C2 Jan 2013

Leave blank

8. The curve C has equation $y = 6 - 3x - \frac{4}{x^3}$, $x \neq 0$

(a) Use calculus to show that the curve has a turning point P when $x = \sqrt{2}$

(4)

(b) Find the x-coordinate of the other turning point Q on the curve.

(1)

(c) Find $\frac{d^2y}{dx^2}$.

(1)

(d) Hence or otherwise, state with justification, the nature of each of these turning points P and Q.

(3)

C2 MAY 2013

Leave blank

6.

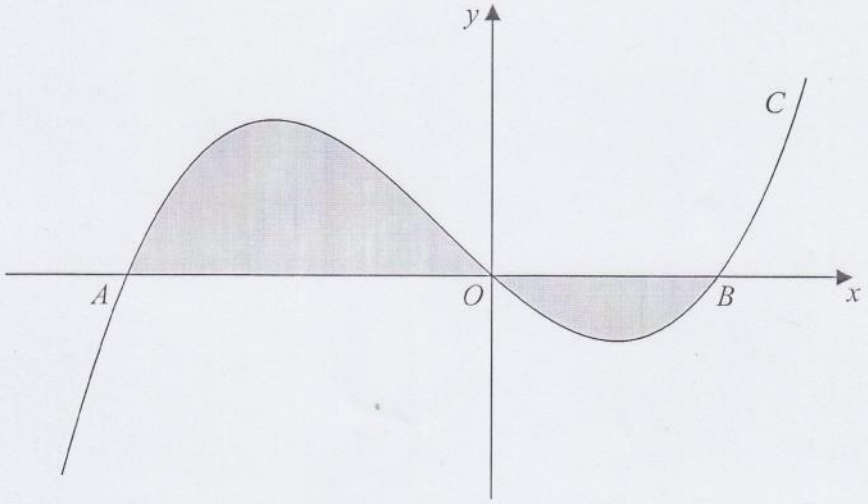

Figure 3

Figure 3 shows a sketch of part of the curve C with equation

$$y = x(x + 4)(x - 2)$$

The curve C crosses the x-axis at the origin O and at the points A and B.

(a) Write down the x-coordinates of the points A and B.

(1)

The finite region, shown shaded in Figure 3, is bounded by the curve C and the x-axis.

(b) Use integration to find the total area of the finite region shown shaded in Figure 3.

(7)

P 4 1 8 5 9 A 0 1 6 3 2

C2 MAY 2013

Leave blank

9. The curve with equation

$$y = x^2 - 32\sqrt{(x)} + 20, \qquad x > 0$$

has a stationary point P.

Use calculus

(a) to find the coordinates of P,

(6)

(b) to determine the nature of the stationary point P.

(3)

P 4 1 8 5 9 A 0 2 6 3 2